Cambridge Assessment International Education

Cambridge International AS & A Level

CANDIDATE NAME

CENTRE NUMBER

CANDIDATE NUMBER

PHYSICS **9702/33**

Paper 3 Advanced Practical Skills 1 **May/June 2023**

2 hours

You must answer on the question paper.

You will need: The materials and apparatus listed in the confidential instructions

INSTRUCTIONS

- Answer **all** questions.
- Use a black or dark blue pen. You may use an HB pencil for any diagrams or graphs.
- Write your name, centre number and candidate number in the boxes at the top of the page.
- Write your answer to each question in the space provided.
- Do **not** use an erasable pen or correction fluid.
- Do **not** write on any bar codes.
- You will be allowed to work with the apparatus for a maximum of 1 hour for each question.
- You should record all your observations in the spaces provided in the question paper as soon as these observations are made.
- You may use a calculator.
- You should show all your working and use appropriate units.

INFORMATION

- The total mark for this paper is 40.
- The number of marks for each question or part question is shown in brackets [ ].

For Examiner's Use	
1	
2	
Total	

This document has **12** pages.

© UCLES 2023

You may not need to use all of the materials provided.

1 In this experiment, you will investigate the motion of a pendulum.

You have been provided with a cylinder and a pendulum.

(a) ● Use adhesive putty to attach the string to the cylinder as shown in Fig. 1.1.

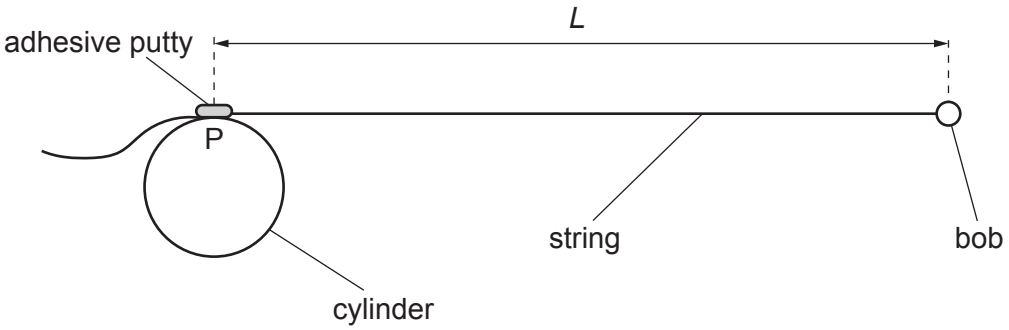

Fig. 1.1

- P is the point at which the string is attached to the cylinder.

  The distance between P and the centre of the bob is *L*.

  Adjust the adhesive putty and string so that *L* is approximately 45 cm.

- Measure and record *L*.

L = ... [1]

© UCLES 2023

(b) ● Set up the apparatus as shown in Fig. 1.2.

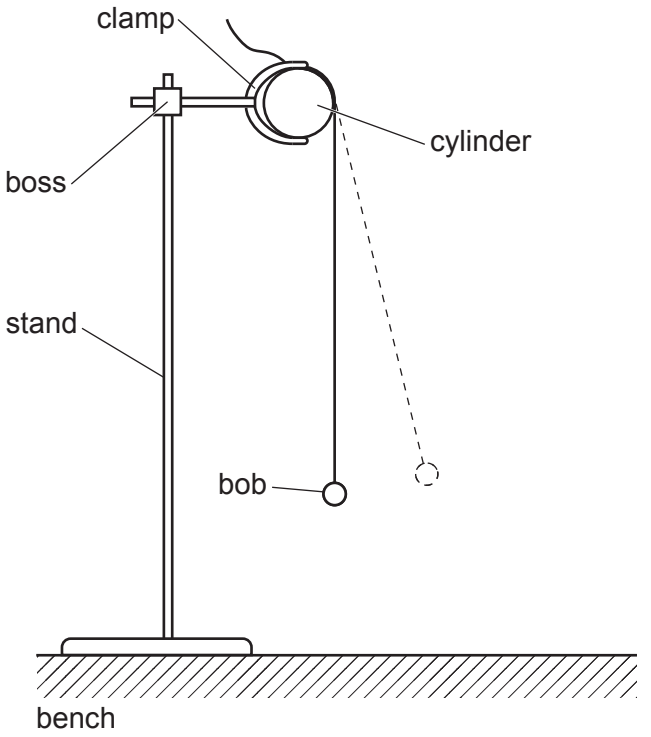

Fig. 1.2

- Move the bob a short distance **away** from the stand, as shown in Fig. 1.2.
- Release the bob. The bob will oscillate.
- Determine the period T of the oscillations of the bob.

T = ... [2]

(c) Change L by attaching a different point on the string to the cylinder and determine T. Repeat until you have six sets of values of L and T.

Record your results in a table. Include values of T^3 and L^2 in your table.

[9]

(d) **(i)** Plot a graph of T^3 on the y-axis against L^2 on the x-axis. [3]

(ii) Draw the straight line of best fit. [1]

(iii) Determine the gradient and y-intercept of this line.

gradient = ...

y-intercept = ...
[2]

© UCLES 2023

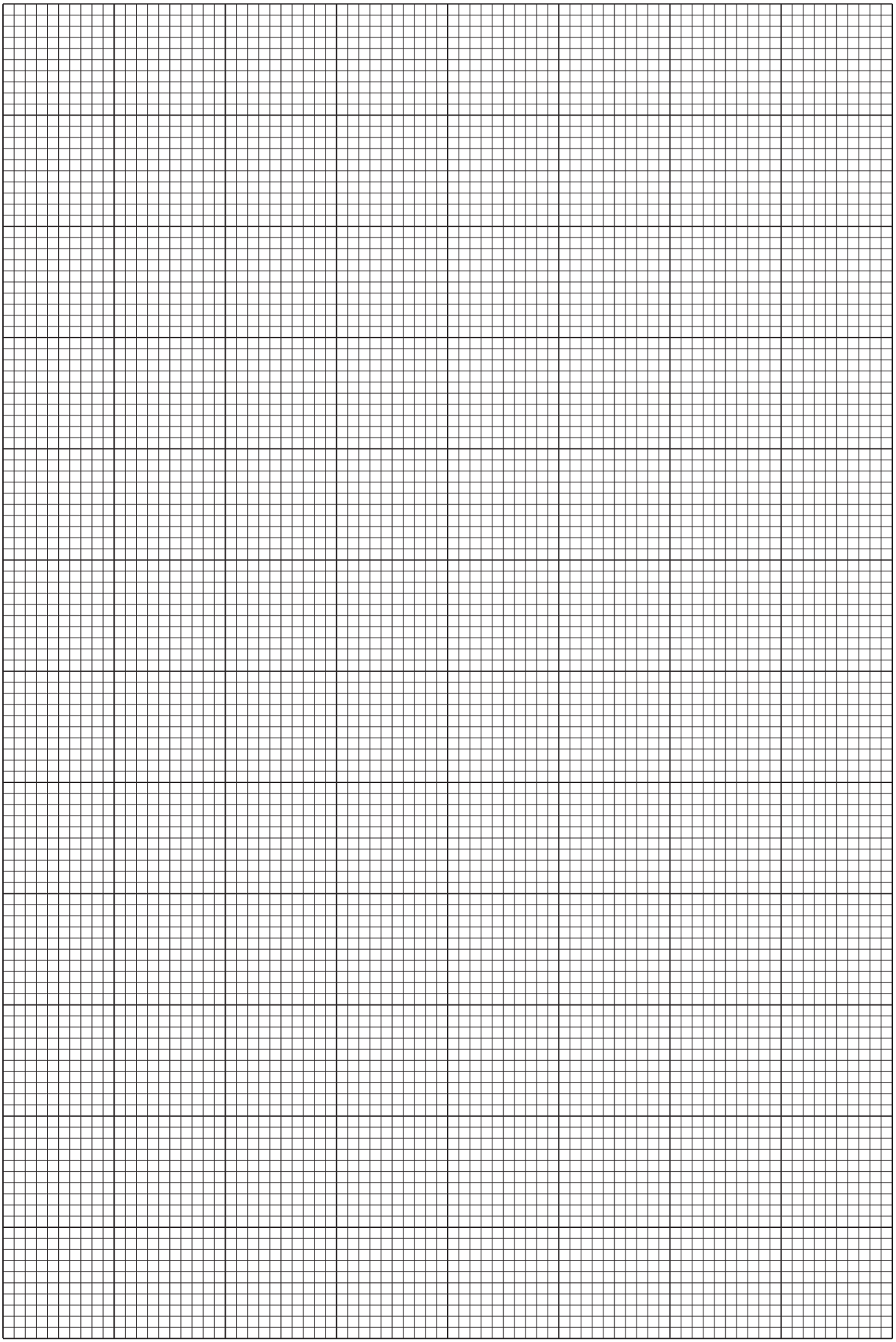

(e) It is suggested that the quantities T and L are related by the equation

$$T^3 = EL^2 + F$$

where E and F are constants.

Using your answers in **(d)(iii)**, determine the values of E and F.
Give appropriate units.

E = ...

F = ...
[2]

[Total: 20]

© UCLES 2023

You may not need to use all of the materials provided.

2 In this experiment, you will investigate the equilibrium of a card.

You have been provided with a card.

(a) The card has one edge of length h and another edge of length x, as shown in Fig. 2.1.

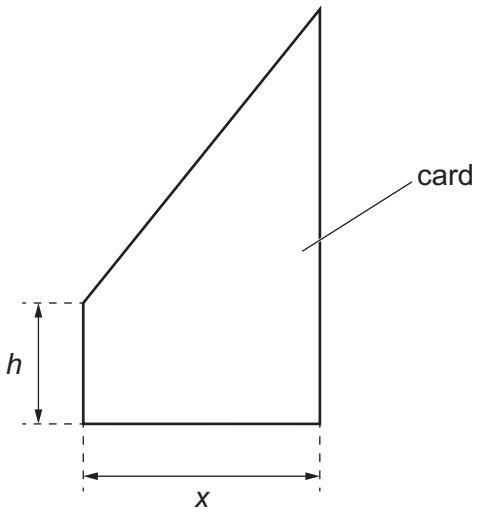

Fig. 2.1

(i) Measure and record h and x.

h = ... cm

x = ... cm [1]

(ii) Calculate the area A of the card, where

$$A = hx + \frac{5x^2}{8}.$$

A = ...cm^2 [1]

(iii) Justify the number of significant figures that you have given for your value of A.

.....

.....

..... [1]

(b) (i) ● Use the nail to make a hole close to one corner of the card, as shown in Fig. 2.2.

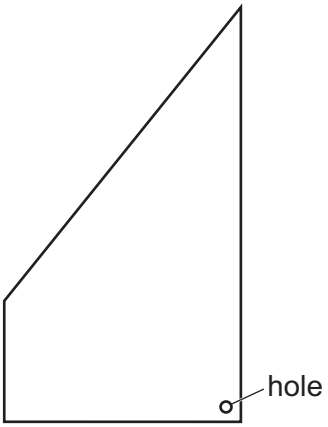

Fig. 2.2

● Set up the apparatus as shown in Fig. 2.3.

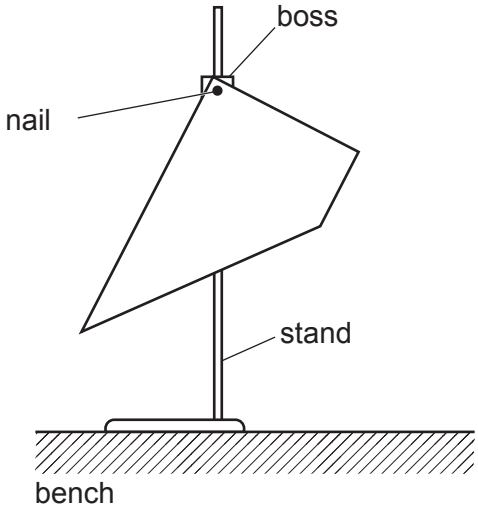

Fig. 2.3

● Push the nail through the hole in the card.

● Fix the nail in the boss.

● Ensure that the card swings freely from the nail.

● Use the set square and the ruler to draw a vertical line on the card below the nail.

● Repeat using **two** more holes close to two other corners of the card.

© UCLES 2023

- Fig. 2.4 shows an example of the card with three lines drawn on it.

  The three lines cross at distances *c* and *d* from the two edges of the card shown in Fig. 2.4.

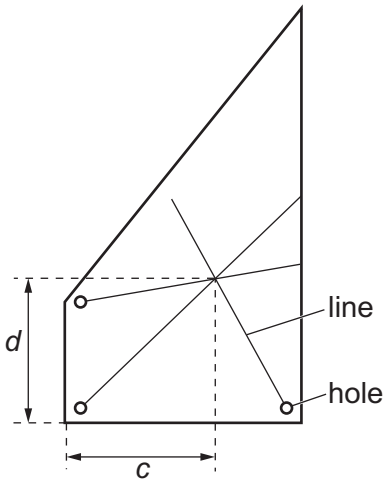

Fig. 2.4

Measure and record *c* and *d*.

c = ... cm

d = ... cm
[2]

(ii) Estimate the percentage uncertainty in your value of *c*. Show your working.

percentage uncertainty = ... % [1]

(c) (i) ● Cut the card as shown in Fig. 2.5 so that x is approximately 9 cm.

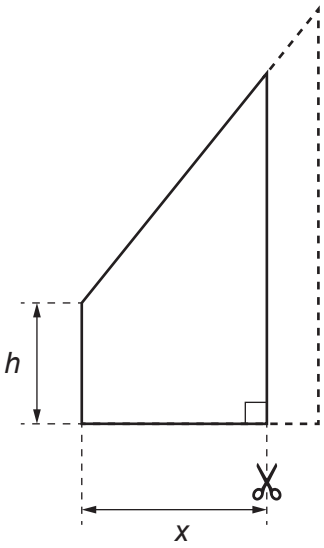

Fig. 2.5

● Measure and record x.

x = ... cm [1]

(ii) Repeat **(a)(ii)** and **(b)(i)**.

A = ... cm^2

c = ... cm

d = ... cm
[3]

(d) It is suggested that the relationship between c, A, h and x is

$$cA = \frac{hx^2}{2} + kx^3$$

where k is a constant.

Using your data, calculate two values of k.

first value of k = ...

second value of k = ...
[1]

(e) It is suggested that the percentage uncertainty in the values of k is 5%.

Using this uncertainty, explain whether your results support the relationship in **(d)**.

.....

.....

.....

..... [1]

(f) (i) Describe **four** sources of uncertainty or limitations of the procedure for this experiment.

For any uncertainties in measurement that you describe, you should state the quantity being measured and a reason for the uncertainty.

1 .....

.....

2 .....

.....

3 .....

.....

4 .....

.....

[4]

(ii) Describe **four** improvements that could be made to this experiment. You may suggest the use of other apparatus or different procedures.

1 .....

.....

2 .....

.....

3 .....

.....

4 .....

.....

[4]

[Total: 20]

Permission to reproduce items where third-party owned material protected by copyright is included has been sought and cleared where possible. Every reasonable effort has been made by the publisher (UCLES) to trace copyright holders, but if any items requiring clearance have unwittingly been included, the publisher will be pleased to make amends at the earliest possible opportunity.

To avoid the issue of disclosure of answer-related information to candidates, all copyright acknowledgements are reproduced online in the Cambridge Assessment International Education Copyright Acknowledgements Booklet. This is produced for each series of examinations and is freely available to download at www.cambridgeinternational.org after the live examination series.

Cambridge Assessment International Education is part of Cambridge Assessment. Cambridge Assessment is the brand name of the University of Cambridge Local Examinations Syndicate (UCLES), which is a department of the University of Cambridge.